TENANT DESIGN MANUAL

LENOX SQUARE®

A SIMON MALL

UPDATED JUNE 2015

SIMON℠

PROJECT OVERVIEW

LENOX SQUARE®
A SIMON MALL

Lenox Square is located at the intersection of Peachtree and Lenox Roads, in the prestigious Buckhead area, just minutes from downtown Atlanta, near the convergence of I-75 and I-85. The center was enclosed in 1972, renovated in 1995, and expanded in 2007.

PROJECT OVERVIEW

LENOX SQUARE®
A SIMON MALL

CONVENIENT TO ALL OF ATLANTA, LENOX SQUARE FEATURES BLOOMINGDALE'S, MACY'S, NEIMAN MARCUS, AND AN ARRAY OF SPECIALTY SHOPS, ENCOMPASSING MORE THAN 1.5 MILLION SQUARE FEET OF RETAIL.

SITE PLAN

LENOX SQUARE®
A SIMON MALL

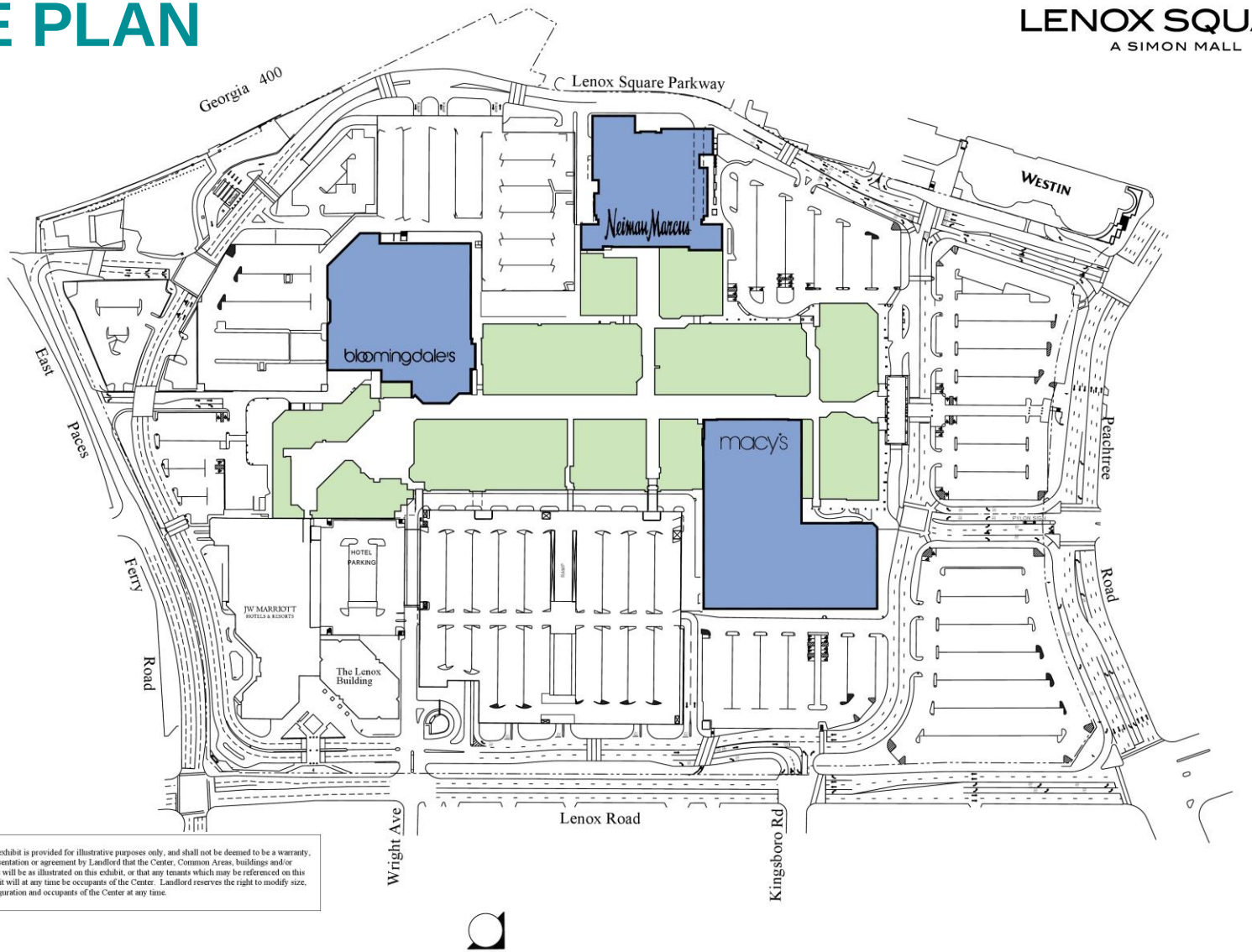

This exhibit is provided for illustrative purposes only, and shall not be deemed to be a warranty, representation or agreement by Landlord that the Center, Common Areas, buildings and/or stores will be as illustrated on this exhibit, or that any tenants which may be referenced on this exhibit will at any time be occupants of the Center. Landlord reserves the right to modify size, configuration and occupants of the Center at any time.

TENANT INFORMATION PACKAGE

LENOX SQUARE®
A SIMON MALL

- The **Tenant Information Package (TIP)** is intended to provide you with the project's design and construction criteria and consists of several parts:

COMPONENT	DESCRIPTION
TIP Index	Will provide a comprehensive list of topics to help locate information
Tenant Design Manual	Provide mall specific architectural, sign and engineering design criteria
Kiosk Design Manual	
Architectural Criteria	Outline submission requirements and will provide necessary guidelines to design your store.
MEP/FP Criteria	(same as Architectural Criteria)
Bulletins	

TENANT INFORMATION PACKAGE

LENOX SQUARE®
A SIMON MALL

- The Tenant Information Package can be accessed from Simon's website – simon.com.
  - » Select the business header, search for the property name, click on the Tenant Info Package link on the right side of the page.
  - » If you have any difficulties working with the website, please contact your Tenant Coordinator.

*For questions regarding the Landlord's design and construction requirements, please contact your Tenant Coordinator or call 317-636-1600 and ask for Tenant Coordination.

MALL BUILDING DATA

LENOX SQUARE®
A SIMON MALL

Occupancy/ Use:	Mercantile
Construction Classification:	Type IIB
Building Levels:	Five (5) Levels
Sprinkler System:	Fully Sprinkled

STOREFRONT ELEVATION:

LENOX SQUARE®
A SIMON MALL

Tenants shall construct storefronts to underside of the Landlord's bulkhead, which vary in height from 9'-9" to 14'-0" A.F.F. Storefront and neutral pier conditions vary. Tenant must maximize available height and verify in the field. Signs are to be incorporated into Tenant's overall storefront design with letter height not to exceed 12" except for scripted letters which can be 16"-18" maximum.

EXTERIOR STOREFRONT ELEVATION:

LENOX SQUARE®
A SIMON MALL

Plaza level Tenants have exterior entrances.

NEUTRAL PIER DETAIL:

LENOX SQUARE®
A SIMON MALL

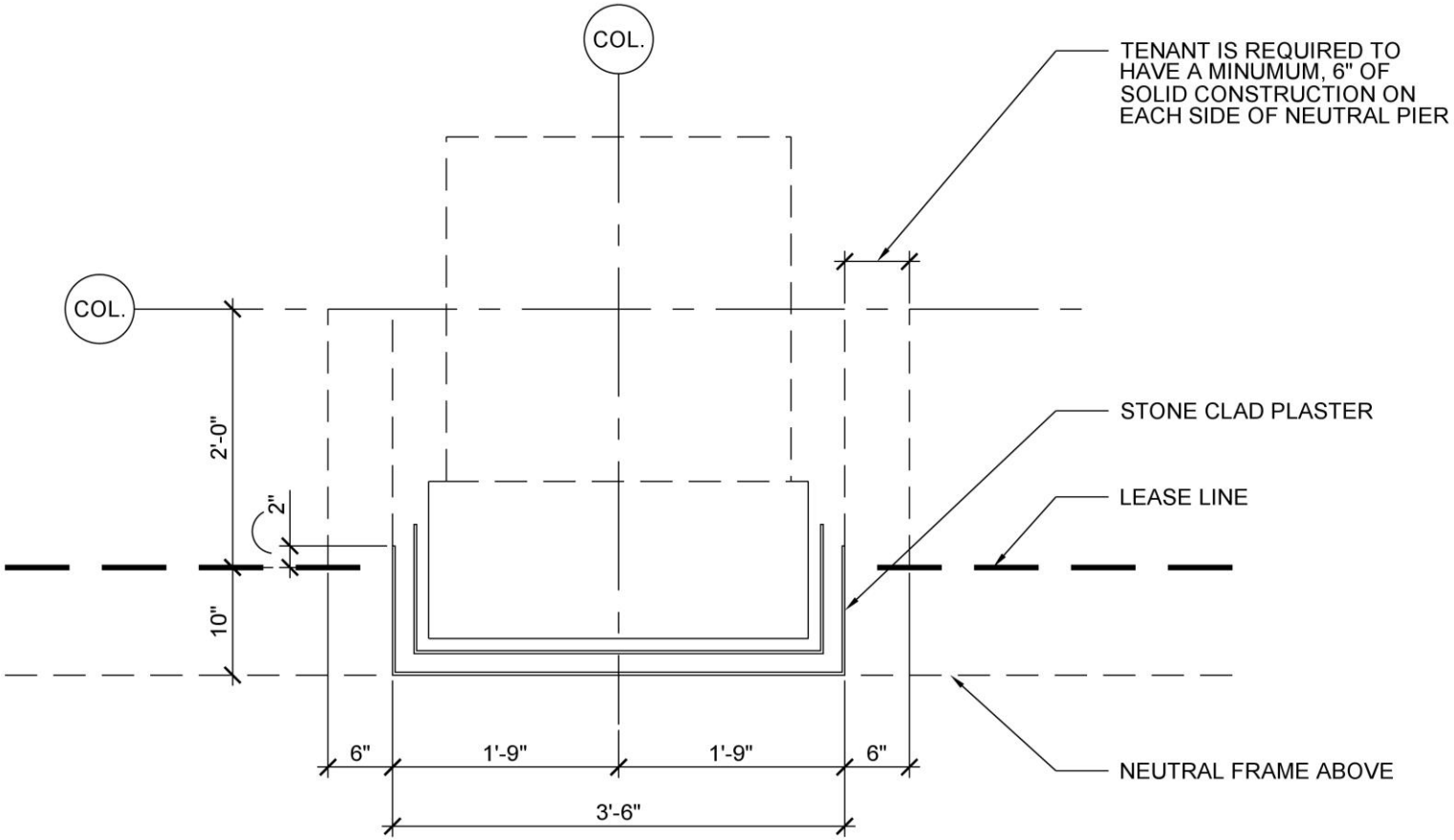

NEUTRAL PIER DETAIL:

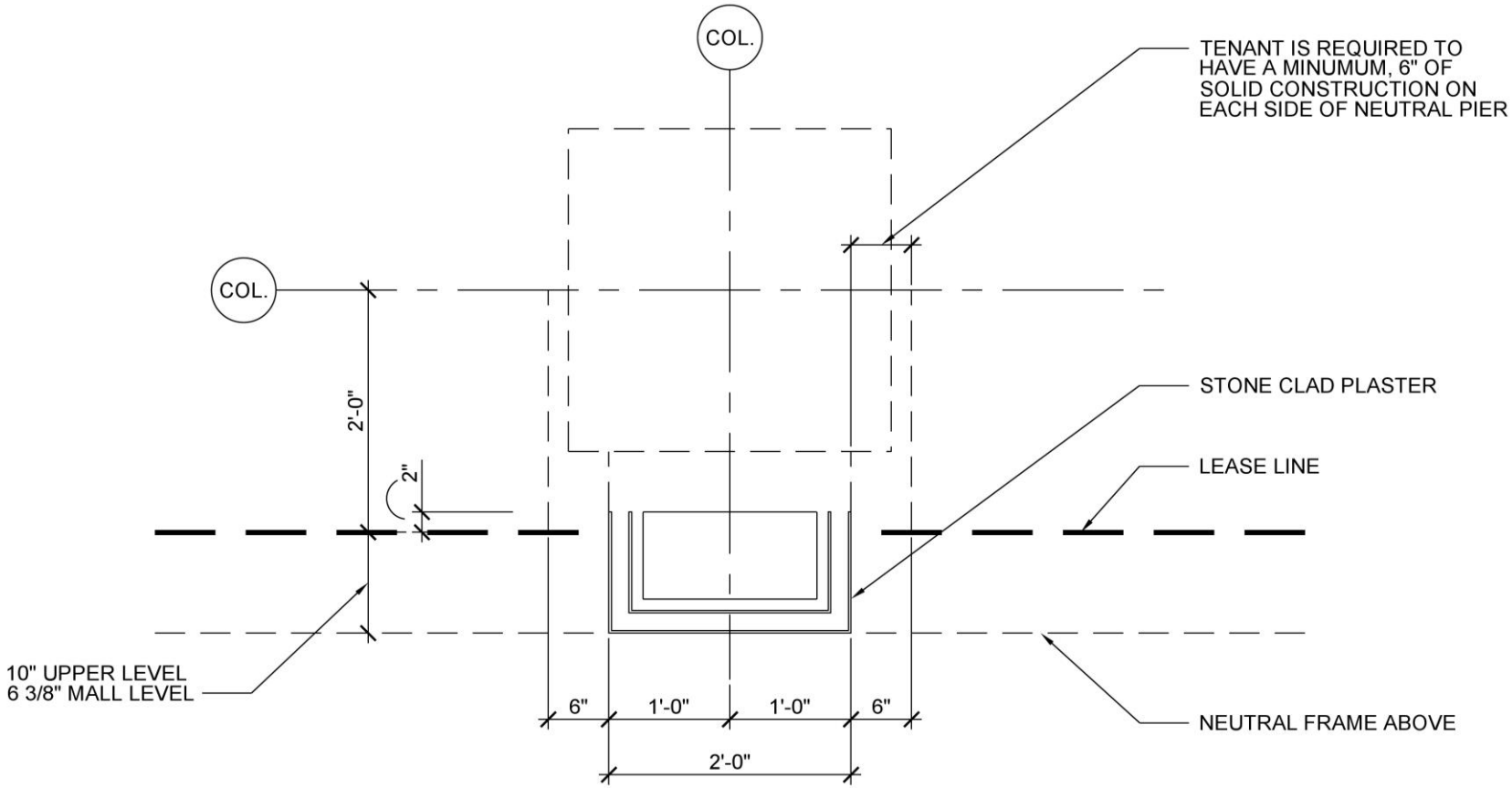

NEUTRAL PIER DETAIL:

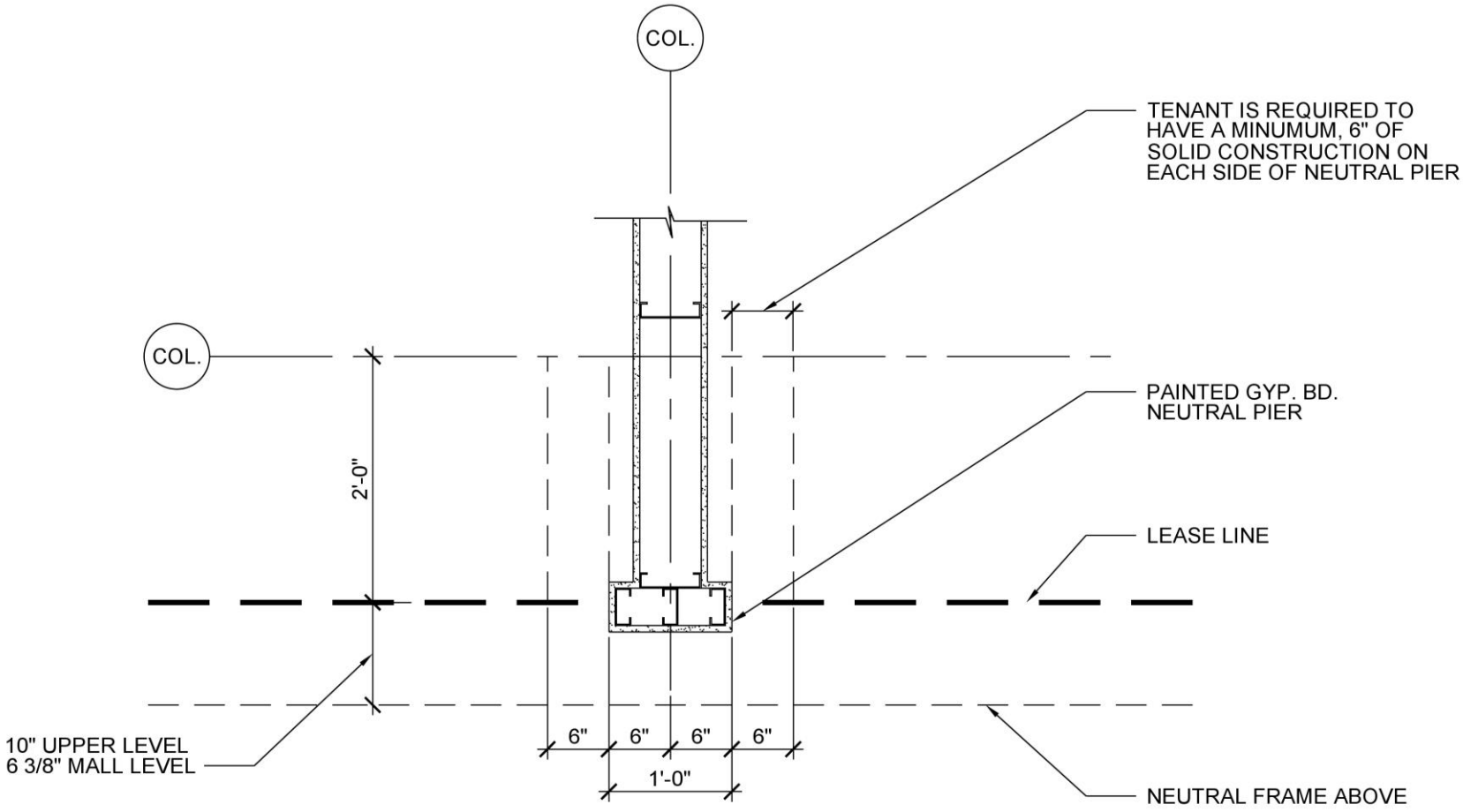

Typical Neutral Pier

STOREFRONT SIGNS, AWNINGS AND CANOPIES

LENOX SQUARE®
A SIMON MALL

OVERVIEW - FOOD CAFÉ:

LENOX SQUARE®
A SIMON MALL

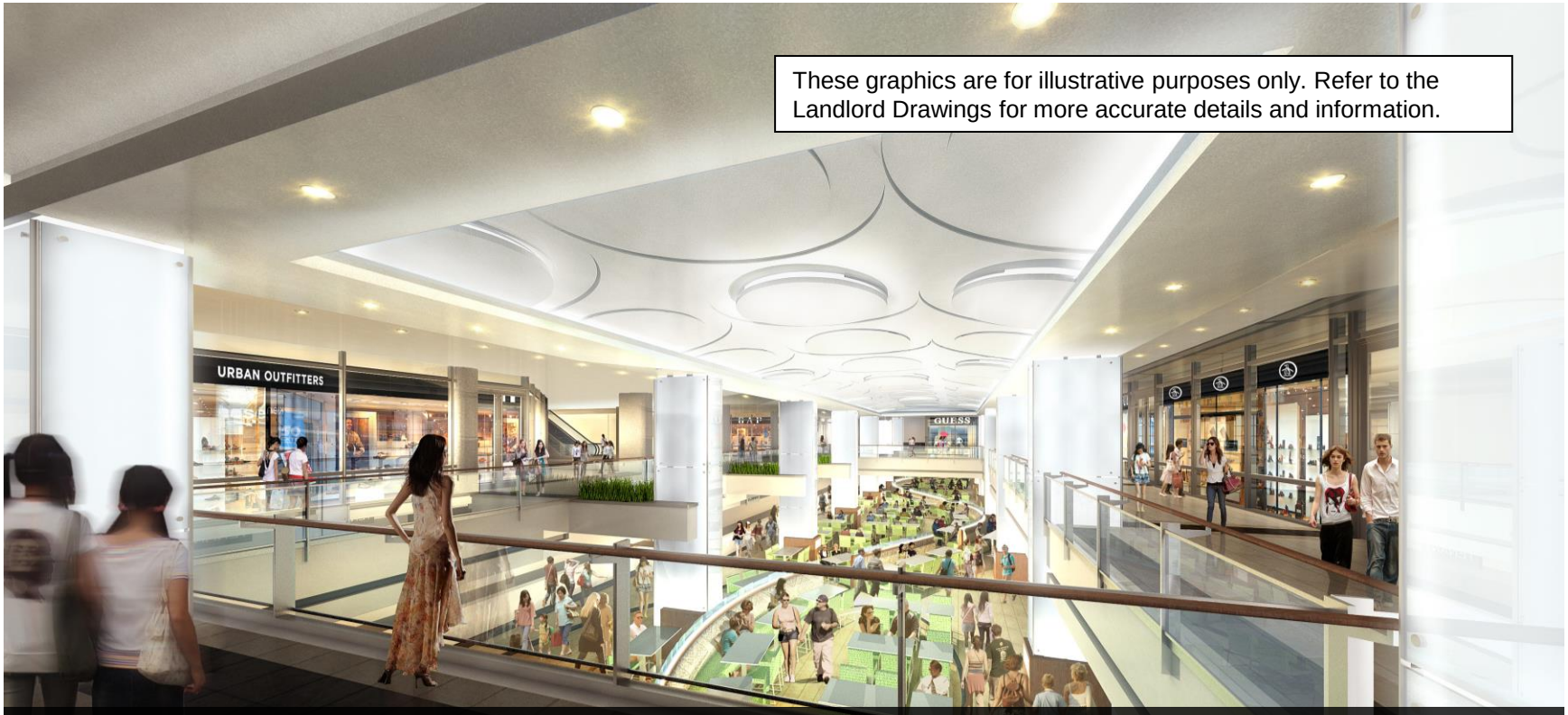

These graphics are for illustrative purposes only. Refer to the Landlord Drawings for more accurate details and information.

THE LENOX SQUARE RENOVATION WILL INTRODUCE A NEW FASHION CAFÉ AREA FOR FOOD SERVICE TENANTS. IT WILL OFFER AN EXCITING CULINARY EXPERIENCE WITHIN A MODERN AND UPSCALE SETTING. TENANTS ARE THEREFORE CHALLENGED TO PRESENT A VISUALLY STIMULATING DESIGN. A STRONG PRESENTATION IS ENCOURAGED THROUGH CREATIVE USE OF ARCHITECTURAL MATERIALS AND GRAPHIC DESIGN, ALONG WITH SIGNING CONSISTENT WITH THE OVERALL VISION OF THE NEW FASHION CAFÉ SETTING.

FOOD CAFÉ – OVERVIEW:

LENOX SQUARE®
A SIMON MALL

These graphics are for illustrative purposes only. Refer to the Landlord Drawings for more accurate details and information.

FOOD CAFÉ

LENOX SQUARE®
A SIMON MALL

Tenants are required to design a unique, upscale bistro type restaurant for counter service. The areas visible to the public need to have a high level of design and project an overall image of an uncluttered, fresh look. Counters, lighting, materials, signing, menu boards all need to present a bold, “one of a kind” design. The creative use of interesting textures and dimension are expected. Review the following pages carefully. This is not a food court. Be innovative.

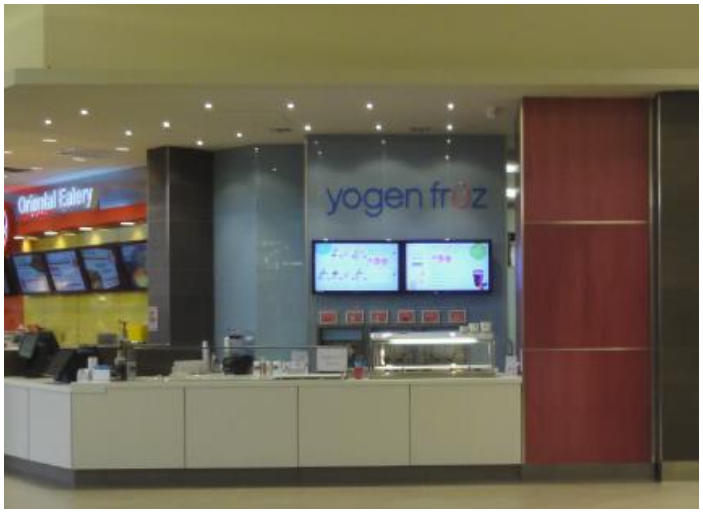

FOOD CAFÉ

LENOX SQUARE®
A SIMON MALL

FOOD CAFÉ

LENOX SQUARE®
A SIMON MALL

- **Front Counters** should be interesting, focused on food display and inviting to the public to visually lure customers to the space.
- All equipment must be recessed or shielded from public view. Cash registers should extend no more than 9” inches above counter top.
- Frameless glass sneeze guards shall be utilized.
- Sneeze guards may not have any other items or signing attached to or resting upon it.
- Countertops shall be monolithic and a durable material such as stainless steel, resin, granite, quartz or concrete.
- Counter fronts of a single, flat material will not be approved. Counter fronts should be visually interesting. The service area and front counter shall utilize multiple types of finishes.
- Tenants are encouraged to separate the selling and pick up of food that requires extended waiting times.
- All finished wood shall be millwork quality kiln dried with a durable protective finish.
- Tenant equipment on counters will be limited, and when allowed, should be set back a minimum of 8” from the front edge of counter.
- Drink dispensers are not permitted on front counter in direct view.
- Condiment and utensil dispensers and holders are not permitted at the front counter unless they are fully recessed into the counter or handed out to customers individually
- No tray slides allowed.
- No power cords or data lines to be visible to the public.
- No self-service dispensers will be permitted on front counter.
- Counter face or under counter illumination is permitted.
- Toe kick material along front counter must be durable. No illumination will be permitted at toe kick.
- Employee access through the front counter is not permitted.
- Grab and go is not permitted.

Materials: Use innovative, high tech materials that project a fresh, modern look to the customer. The materials of the counter, ceiling and back “Feature Wall” need to include the latest materials available on the market. Materials such as:

- Large format tile or stone such as 6” x 24”,12” x 24”or 4” x 30”. Natural, polished or honed.
- Textured finishes that create shade and shadow such as:
- Stainless steel
- Back illuminated glass
- Polished concrete
- Textured metal or resin panels
- Bold wood veneers

FOOD CAFÉ

LENOX SQUARE®
A SIMON MALL

Materials not to be used:

- Clear anodized aluminum
- Consistent use of glazed tile on any one plane.
- 4” x 4”, 6” x 6”, 8” x 8” tile – glazed or unglazed.
- Plastics or laminates
- Faux materials (ie. Brick)
- Wall coverings

Feature Wall is the wall separating the sales from the back of house/kitchen area. This feature wall is expected to be one of the major focal points in establishing the store image to the public and should be used as a billboard or visually stimulating to promote Tenant’s product. Things to consider:

- Both durable and interesting combination of materials should be used on all walls visible to the public. For example, large format stone, glass, metal panels, high quality wood veneer.
- The materials should highlight the overall store design, be full height and act as a backdrop for the uncluttered presentation.
- Site lines to the back of house/kitchen area must be blocked or visually obscured by a full height staggered wall. Typical foodcourt doors will not be permitted.
- Extend the neutral pier demising wall tile to the intersection with the Feature Wall, when possible.
- Work islands in front of the Feature wall area allowed.
- No doors or rolling grilles are allowed.
- No open storage is allowed along this back Feature wall. If storage is integrated, it must be closed cabinetry
- Digital menu boards and store signing should be a part of the Feature wall design.
- Any food passageways between kitchen and front sales area must be kept to a maximum of 24” wide x 10 “ high.
- Painted walls surfaces, plastic laminate or anodized aluminum are not permitted within the areas visible to the public.

Electronic Digital Menu Boards are required. Menu boards must be built into the architecture of the overall storefront design and should not be applied an as afterthought.

- Placement of menu boards should be located so that they do not extend in front of the neutral pier opening and are not placed too far back to read. Placement may occur on the feature wall.
- The brightness of the electronic menu board should not be brighter than the storefront

FOOD CAFÉ

LENOX SQUARE®
A SIMON MALL

- No static graphics or supplemental menu boards are allowed.
- Product logos are not allowed.
- Ghost images in the background of Tenant's name are not allowed.
- Limited to 4 panels unless approved by Landlord.
- No unfinished backs or data lines to be exposed to public.
- Internally illuminated menu boards are not permitted.
- Tenants should take special care to ensure menu board font is sized appropriately for adequate visibility.

Exhaust Hoods located in the front of house areas must also be designed into the overall layout and architecture of the storefront design.

- Any hood placed over the front counter must be integrated into the overall design in conjunction with the storefront sign and electronic menu boards.
- Hoods may be internally illuminated.
- Hoods may not extend beyond the lease line.
- Hoods may not be located within 24" from the side demising walls or neutral piers.
- Extend the neutral pier demising wall tile to the intersection with the Feature Wall, when possible.
- Work islands in front of the Feature wall area allowed.
- No doors or rolling grilles are allowed.
- No open storage is allowed along this back Feature wall. If storage is integrated, it must be closed cabinetry
- Digital menu boards and store signing should be a part of the Feature wall design.
- Any food passageways between kitchen and front sales area must be kept to a maximum of 24" wide x 10 " high.
- Painted walls surfaces, plastic laminate or anodized aluminum are not permitted within the areas visible to the public.

Electronic Digital Menu Boards are required. Menu boards must be built into the architecture of the overall storefront design and should not be applied an as afterthought.

- Placement of menu boards should be located so that they do not extend in front of the neutral pier opening and are not placed too far back to read. Placement may occur on the feature wall.
- The brightness of the electronic menu board should not be brighter than the storefront

FOOD CAFÉ

LENOX SQUARE®
A SIMON MALL

Lighting: Decorative lighting should be used to convey the image of the overall design. Lighting should be focused on the food and the architecture of the store. Avoid an even lighting scheme throughout the entire public area. Recommended lighting approaches include but are not limited to:

- Decorative pendant light fixtures over front sales area.
- Fully recessed track and light fixtures
- Indirect ceiling cove lighting systems
- Surface mounted track lights or fixtures with acrylic or plastic lenses will not be permitted.
- Illuminated exhaust hoods must be concealed and integrated into the design
- No fluorescents lighting is permitted in front of house areas or areas visible to the public.

Flooring: The Tenant is required to extend the mall common area floor paving materials to Tenant's toe kick, with materials, pattern and grout color to match Landlord's materials. Flooring material behind the sales counter and in the kitchen must be durable and waterproof. A waterproof membrane must be included throughout the entire demised floor surface area and turned up 4'-0" along all demising walls to protect the adjacent Tenants and common areas.

Rolling Grilles: Rolling security grilles are not allowed along the front sales counter or in public view between sales area and the prep/kitchen area.

FOOD CAFÉ SIGNAGE

LENOX SQUARE®
A SIMON MALL

Unlike a typical food court, Tenants are expected to integrate signing and graphics into the architecture of the storefront design. Signs must not be an afterthought and applied or hung without understanding the storefront sight lines.

Tenants will not be permitted to build a sign band over the front sales counter.

Graphic statements are encouraged as part of the back feature wall architecture or on glass panels.

FOOD CAFÉ SIGNAGE

LENOX SQUARE®
A SIMON MALL

- Maximum overall letter height will be 14”.
- Signing can be suspended from the ceiling, mounted on an illuminated light frame, applied onto the feature wall or a part of the menu board.
- “Place Order” and “Pick up” signs should be incorporated into the overall design.
- Tenants are encouraged to incorporate bold, creative and unique signing into their design, such as:
- Metal letters backlit to produce a halo effect
- Pin mounted metal, porcelain, polished brass or copper letters
- Edge lit, sandblasted glass
- Edge lit letters with push thru lettering
- Prohibited Sign Types are:
- Box or Cabinet type signs
- Exposed Neon type signs
- Non illuminated signs
- Tag lines or daily special signs

FOOD CAFÉ TYPICAL STOREFRONT ELEVATION

LENOX SQUARE®
A SIMON MALL

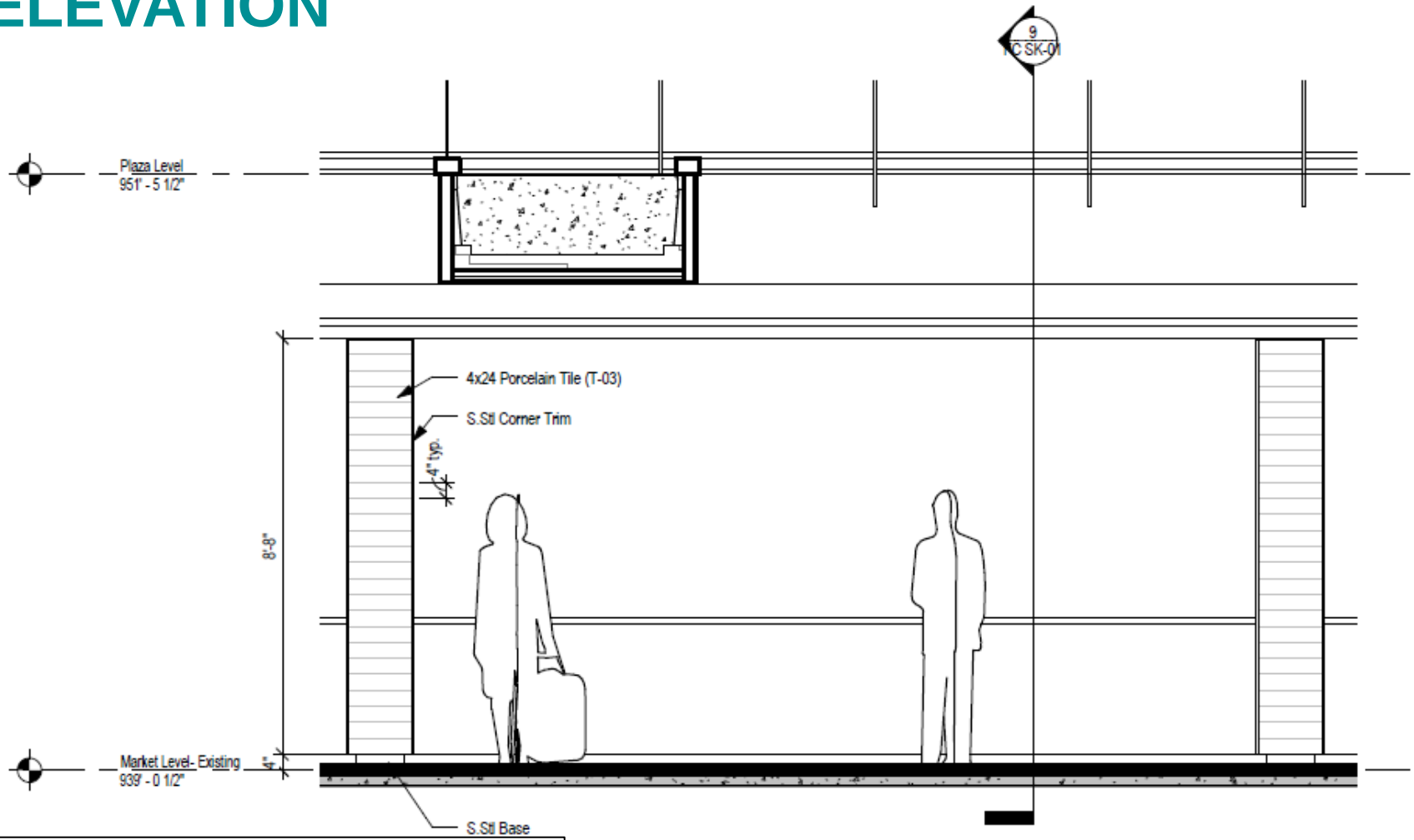

These graphics are for illustrative purposes only. Refer to the Landlord Drawings for more accurate details and information.

FOOD CAFÉ TYPICAL STOREFRONT ELEVATION

LENOX SQUARE®
A SIMON MALL

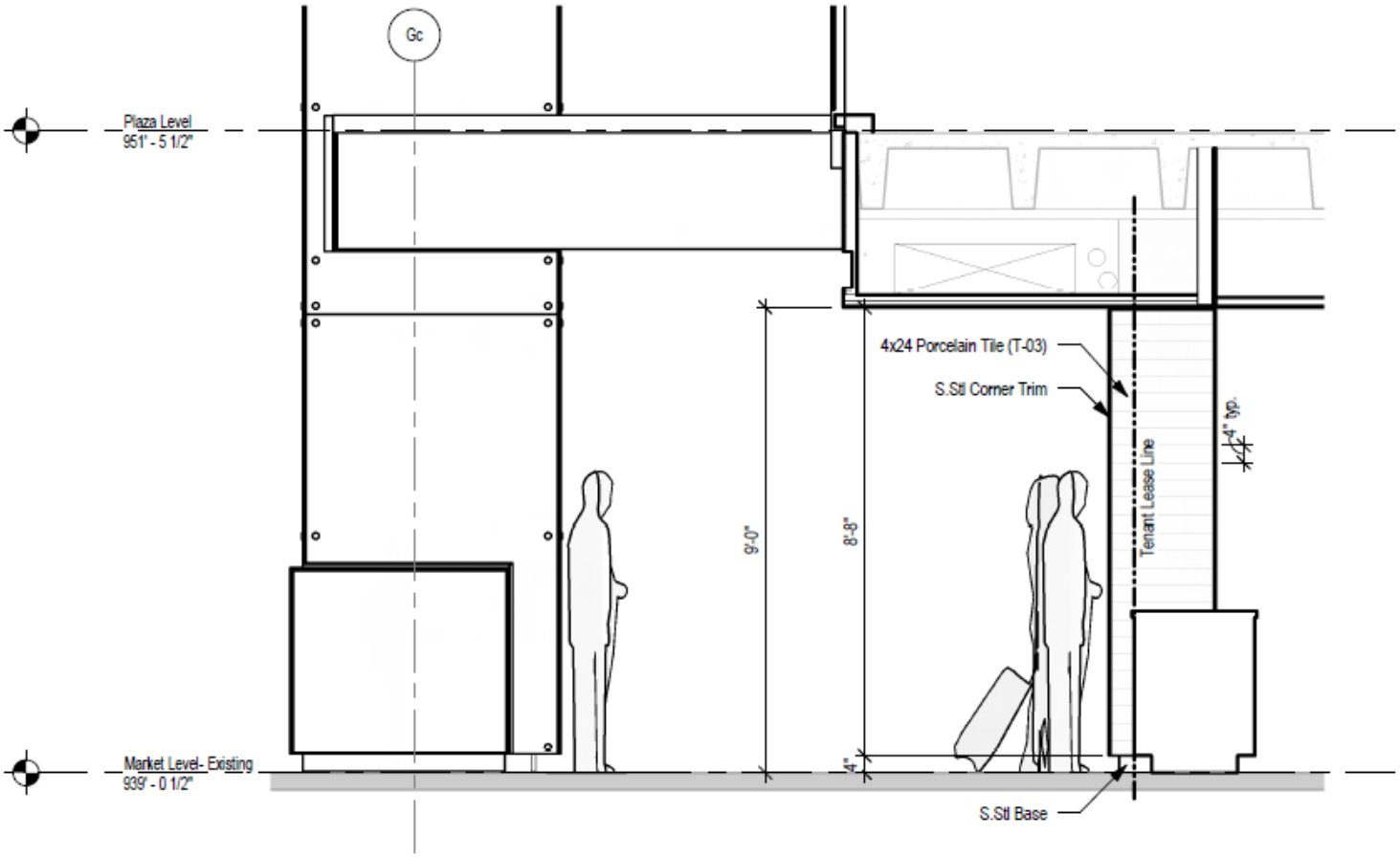

These graphics are for illustrative purposes only. Refer to the Landlord Drawings for more accurate details and information.

FOOD CAFÉ NEUTRAL PIER DETAIL

LENOX SQUARE®
A SIMON MALL

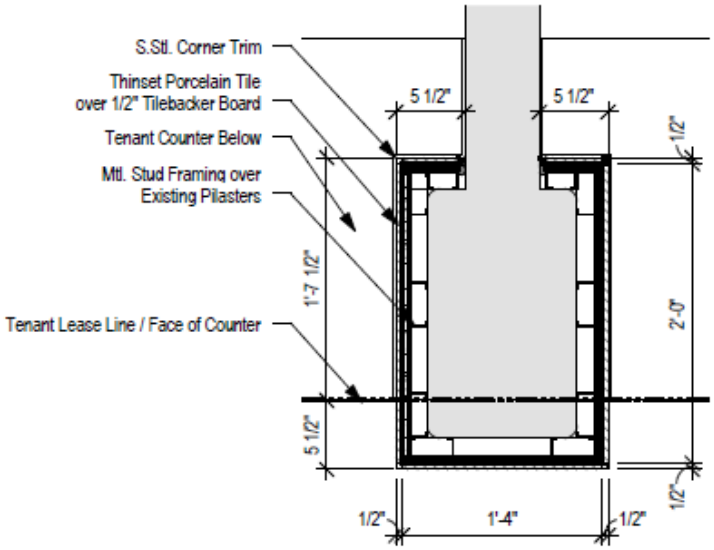

5 Tenant Pilaster Plan Detail
SCALE: 1" = 1'-0"

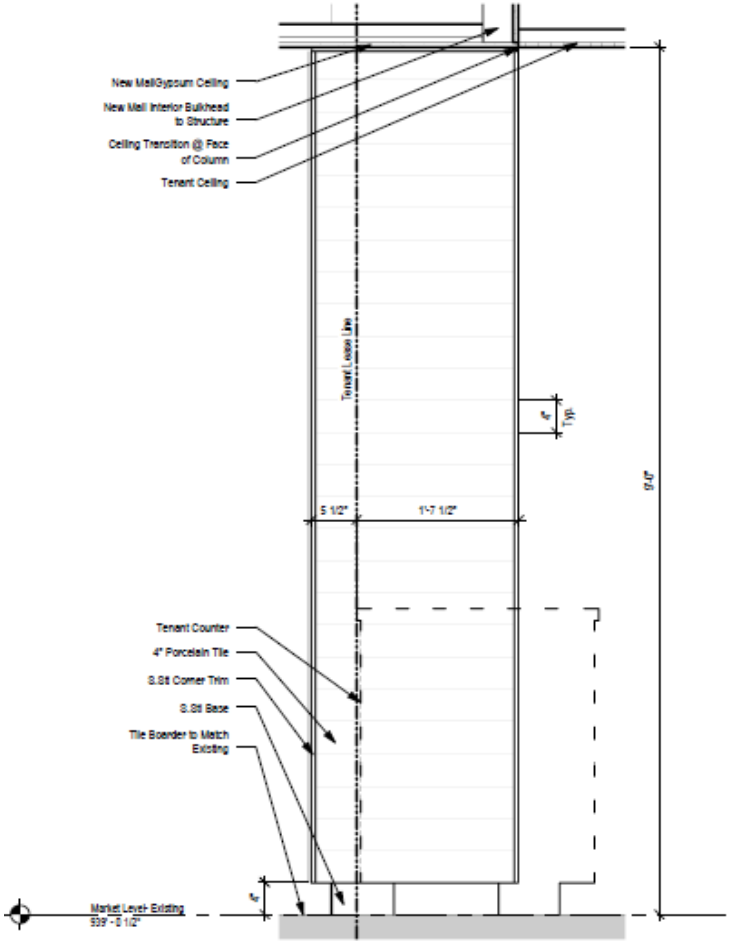

7 Tenant Column- Side Elevation
SCALE: 1" = 1'-0"

These graphics are for illustrative purposes only. Refer to the Landlord Drawings for more accurate details and information.

SIMON℠